DS-1617ZJ

Indoor/Outdoor Wall Mount Bracket

Features:

- Aluminum alloy material with surface spray treatment
- Design of safety rope for more convenient installation

Dimension:

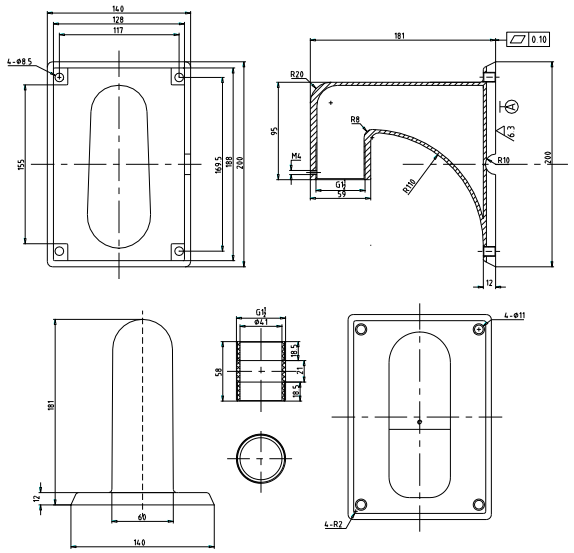

Order Model:

DS-1617ZJ

Parameter:

Model / Parameter	DS-1617ZJ Indoor/Outdoor Wall Mount Bracket
Appearance	Hikvision White
Range of Application	For speed dome wall mount
Material	Aluminum Alloy
Dimension	140x200x181mm
Weight	420g

Notice:

- The bracket should be installed on plat wall
- Load capacity of pole should be more than 3 times the weight of camera and bracket
- Load capacity of bracket is 10KG

Installation Step:

① Choose appropriate wall for bracket installation and thread the cable

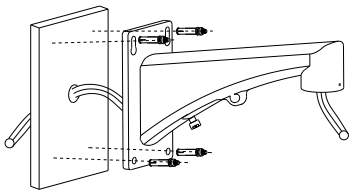

② Fix the adaptor ring with tightening screw

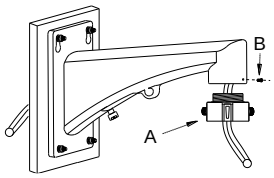

A: Adaptor ring (in the package of speed dome)

B: Tightening Screw

③ Tie the safety rope to hook and thread the cable

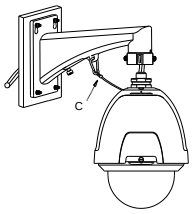

C: Safety rope

④ Screw up the set screw, thread the cable and fix the lid of cable entrance hole; installation complete

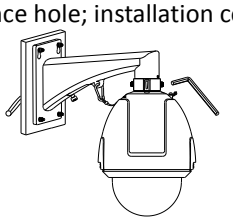

Note: The actual bracket may vary from the picture above.